KSD302 Snap-Action Thermostat

Product Technical Datasheet | Configuration Options



Product overview
The KSD302 is a bimetal snap-action thermostat designed for temperature control and over-temperature protection in heating equipment.

Reset type
Manual Reset / Automatic Reset
Contact form
NO / NC
Housing materials
Phenolic / Ceramic
Typical applications
Instant water faucets, ovens, instant water heaters and other heating applications.

Key Technical Specifications

Parameter	Specification / Options
Rated voltage	AC 250 V
Rated current	25 A / 30 A / 35 A (resistive load)
Contact structure	Single-Pole Single-Throw (SPST)
Contact form	Normally open (NO) / Normally closed (NC)
Reset type	Manual Reset / Automatic Reset
Temperature sensing element	1/2-inch bimetallic disc
Housing materials	Phenolic / Ceramic
Temperature range	45°C to 150°C
Temperature differential / tolerance	±3°C to ±5°C
Contact resistance	≤ 50 mΩ
Insulation resistance	≥ 100 MΩ
Dielectric strength	1500 V AC, 5 mA, 1 minute
Electrical life	6,000 cycles
Ambient temperature	160°C
Terminal type	M4 screw terminals
Certifications (CQC)	CQC16002160616 (Phenolic) / CQC18002203323 (Ceramic)

Zhongshan Boantai Electric Technology Co., Ltd.
A high-tech enterprise specializing in flow sensors, flow switchs, water pumps, solenoid valves, safety insulation valves, and thermostats R&D, manufacturing & sales.

Address: No. 5, Shengping North Road, Nantou Town, Zhongshan City, Guangdong Province, China
Email: info@boantai.com

Mechanical Design & Configurations

Illustrated Mechanical Drawing

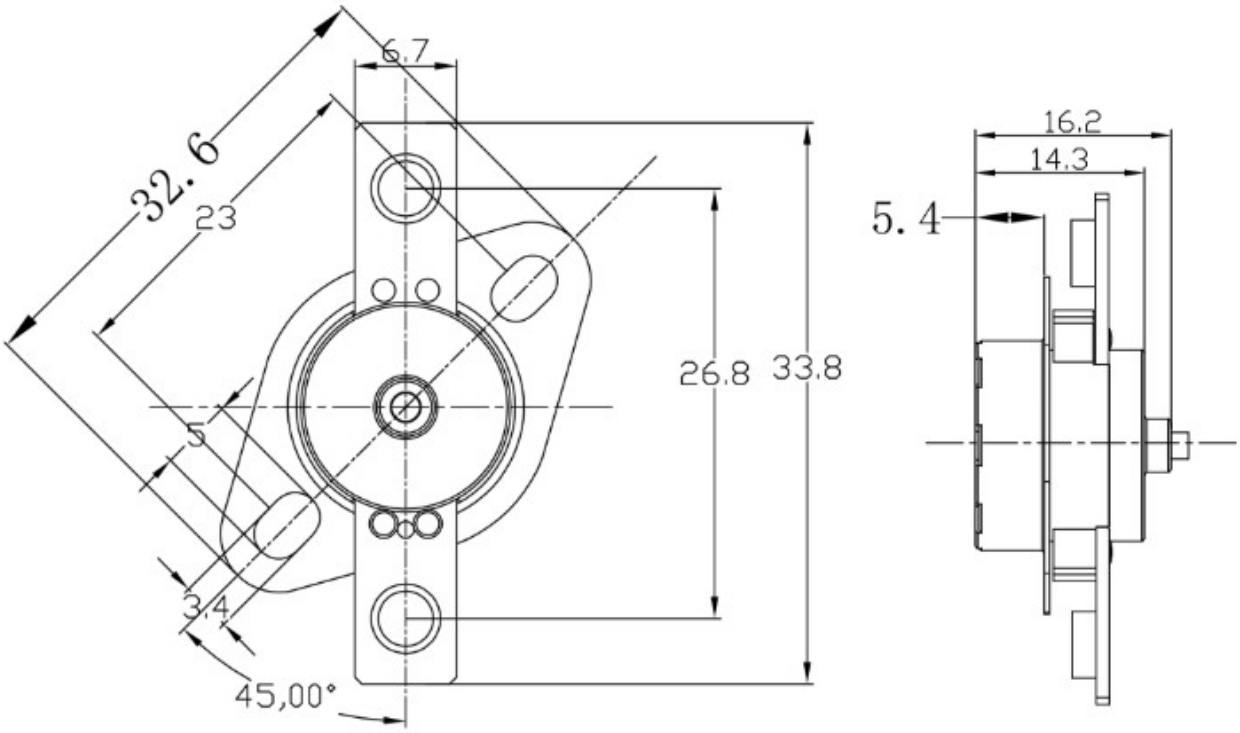

Available Configuration Options



45° Fixed Bracket



35 mm Bracket



Automatic Reset

Zhongshan Boantai Electric Technology Co., Ltd.
A high-tech enterprise specializing in flow sensors, flow switchs, water pumps, solenoid valves, safety insulation valves, and thermostats R&D, manufacturing & sales.

Address: No. 5, Shengping North Road, Nantou Town, Zhongshan City, Guangdong Province, China
Email: info@boantai.com

Selection & Ordering Information

Configuration Selection

Selection item	Available options / details to confirm
Model	KSD302
Rated voltage	AC 250 V
Rated current	25 A / 30 A / 35 A
Contact form	NO / NC
Reset type	Manual Reset / Automatic Reset
Housing material	Phenolic / Ceramic
Temperature	45°C to 150°C
Temperature differential / tolerance	±3°C to ±5°C
Mounting bracket angle	45° fixed / 90° fixed / Other options: confirm with Engineering
Mounting-hole spacing	23 mm / 35 mm
Terminal	M4 screw, 0° / 90° / Other options: confirm with Engineering

Ordering information: Please specify KSD302 + rated voltage + rated current (25 A / 30 A / 35 A) + contact form (NO / NC) + reset type (Manual Reset / Automatic Reset) + housing material (Phenolic / Ceramic) + operating temperature + mounting bracket angle + mounting-hole spacing + terminal orientation.

Address: No. 5, Shengping North Road, Nantou Town, Zhongshan City, Guangdong Province, China
Email: info@boantai.com