Mechanical Design & Configurations

Illustrated Mechanical Drawing

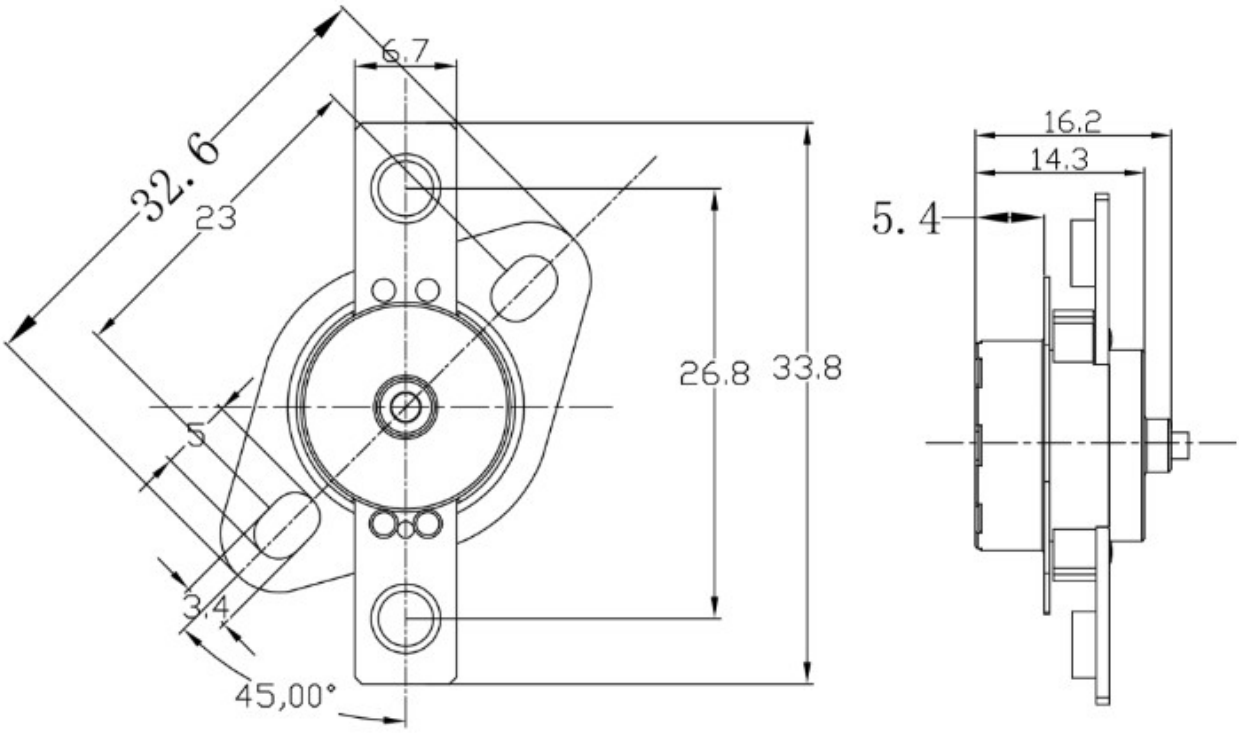

Available Configuration Options



45° Fixed Bracket



35 mm Bracket



Automatic Reset

Zhongshan Boantai Electric Technology Co., Ltd.
A high-tech enterprise specializing in flow sensors, flow switchs, water pumps, solenoid valves, safety insulation valves, and thermostats R&D, manufacturing & sales.

Address: No. 5, Shengping North Road, Nantou Town, Zhongshan City, Guangdong Province, China
Email: info@boantai.com